DEEP TREATMENT RESPONSE ASSESSMENT AND PREDICTION OF COLORECTAL CANCER LIVER METASTASES

M. M Islam[°,*], B. Badic[°,◇], T. Aparicio[•], D. Tougeron[⋈], J.-P. Tasu[°,⋈], D. Visvikis[°] and P.-H. Conze[°,⋆]

[°] LaTIM UMR 1101, Inserm, Brest, France [*] Maastricht University, Maastricht, The Netherlands [◇] University Hospital of Brest, Brest, France
[•] Saint-Louis Hospital, AP-HP, Paris, France [⋈] University Hospital of Poitiers, Poitiers, France [⋆] IMT Atlantique, Brest, France

pierre-henri.conze@imt-atlantique.fr

Introduction

Colorectal cancer:
- second leading cause of cancer death
- ≈ half of patients develop a distant recurrence

Liver, through the development of **liver metastases**, is the most common spread site. When surgery is not an option due to the tumor burden, **palliative oncological treatments** are administrated.
Assessing **treatment response** involves CT image analysis and RECIST1.1 criterion [1]. These tasks are largely performed manually by clinicians, hence time-consuming and prone to expert variability.

Methodology

We propose a deep learning based treatment response assessment pipeline and its extension for prediction purposes based on a newly designed 3D Siamese classification network.

Treatment response assessment (TRA) exploits pair of volumetric CT scans from consecutive pre-treatment and post-treatment examinations, acquired at times t and $t+1$.

Treatment response prediction (TRP) at time $t+1$ given only the CT scan acquired at time t.

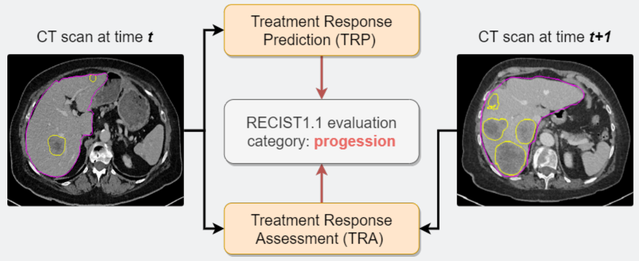

A **liver metastasis segmentation** task has also been tackled as it helps improving both TRA and TRP tasks.

Network architecture

- **Siamese network** built upon a modified 3D ResNeXt-26 architecture. Each **residual** block is fitted with a 3D concurrent spatial and channel **squeeze-and-excitation** layer [3].
- Introduced **long skip-connections** that transfer features arising from different network depths to the very end of the pipeline by aggregating them with the final output of the ResNeXt blocks.

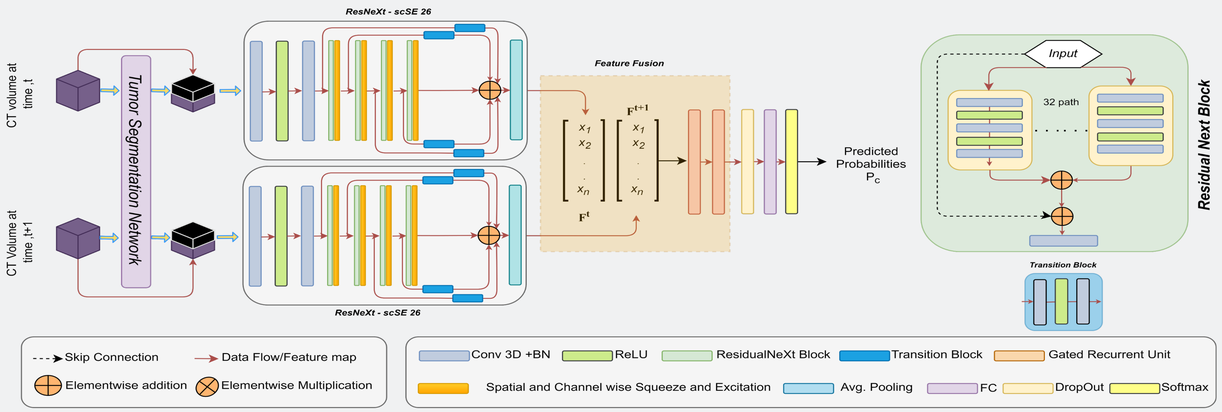

- To predict the **early treatment response** (TRP), we adopted the TRA pipeline by modifying it to a single 3D ResNeXt branch instead of a Siamese style architecture.

[1] E. A Eisenhauer et al. New response evaluation criteria in solid tumours: revised RECIST guideline (version 1.1). *European Journal of Cancer*, 2009.

[2] T. Aparicio et al. Bevacizumab+chemotherapy versus chemotherapy alone in elderly patients with untreated metastatic colorectal cancer: a randomized phase II trial—PRODIGE 20 study results. *Annals of Oncology*, 2018.

[3] A. G Roy et al. Concurrent spatial and channel squeeze & excitation in fully convolutional networks. In *International Conference on Medical Image Computing and Computer-Assisted Intervention*, 2018.

Results

TRA/TRP pipelines were evaluated with overall accuracy (acc), sensitivity (sens), specificity (spec), F1 score (F1) and area under the curve (AUC). An **ablation study** was performed to compare the TRA pipeline with 3 striped versions: Model A (w/o GRU-based feature fusion), Model B (w/o long skip-connections and transition blocks) and Model C (w/o segmentation masks as inputs).

	acc	sens	spec	F1	AUC
TRA	94.94	94.89	97.22	94.72	95.56
TRP	86.86	83.22	94.17	83.02	89.25
Model A	92.42	93.17	97.22	92.30	94.17
Model B	89.39	86.89	96.46	82.23	90.39
Model C	87.87	89.17	95.51	84.66	92.34

Our pipeline for TRA achieved 94.94% overall accuracy with high F1-score and TRP pipeline achieved 86.86%. **GradCAM** was used to see what the model is focusing on to make the decision.

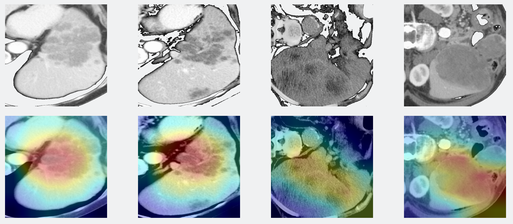

Data

- **PRODIGE20** dataset [2] collected from a phase-II multi-center clinical trial in colorectal cancer with liver metastasis that evaluated chemotherapy alone or combined with Bevacizumab during follow-up.

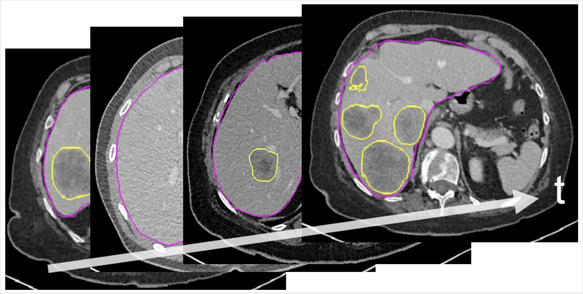

- A total of 400 consecutive CT scan pairs from 102 patients were considered, divided into **4 response groups**: Complete Response (CR), Partial Response (PR), Progression (P) and Stable (S) in accordance with RECIST1.1 [1].

Conclusion

▷ Both treatment response assessment and prediction issues can be effectively solved with **deep learning**.

▷ Our contributions **alleviate** manual liver metastasis segmentation and RECIST1.1 evaluation **burdens**.

▷ A future possible extension is to build a **complete chemotherapy regimen recommendation system** able to predict the best treatment for each patient and which would include other organ assessment such as lungs, lymph nodes, peritoneal cavity and bones.

IMT Atlantique
Bretagne-Pays de la Loire
École Mines-Télécom

Work partially funded by Ligue contre le Cancer. PRODIGE20 was provided with the support from FFCD (Fédération Francophone de Cancérologie Digestive).